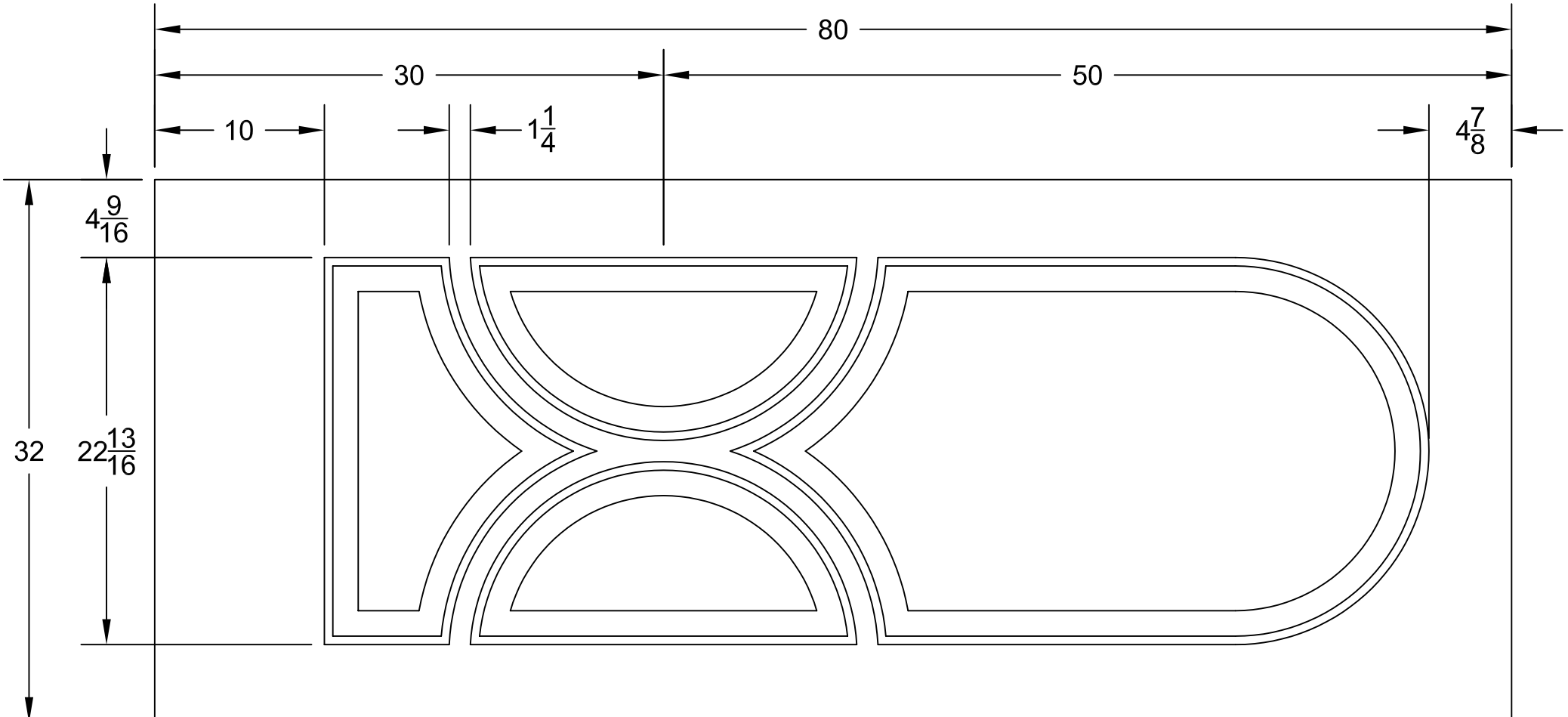
80
30
50
10
$1\frac{1}{4}$
$4\frac{7}{8}$
$4\frac{9}{16}$
32
$22\frac{13}{16}$