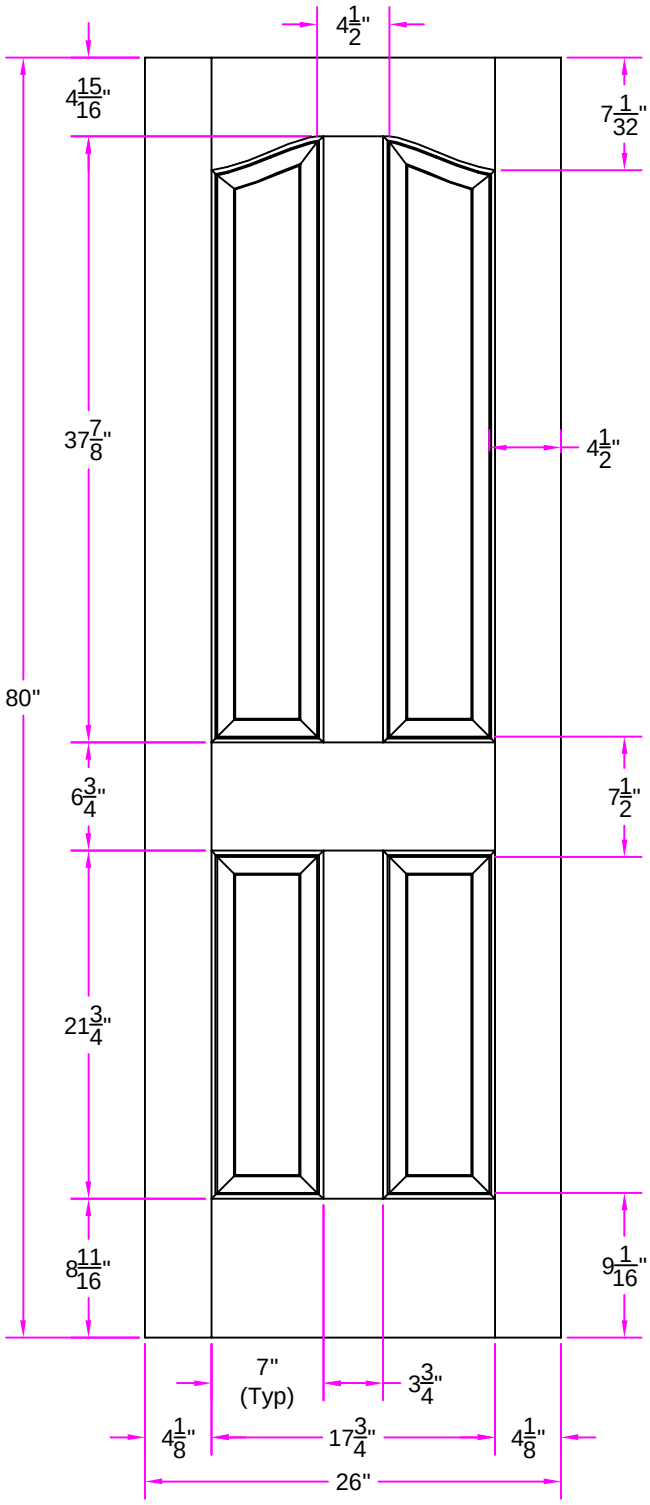

THIS DRAWING AND THE INFORMATION CONTAINED HEREIN IS THE PROPRIETARY TO SIMPSON DOOR COMPANY AND SHALL NOT BE REPRODUCED, COPIED OR DISCLOSED IN WHOLE OR PART, OR USED FOR MANUFACTURE OR FOR ANY OTHER PURPOSE WITHOUT THE WRITTEN PERMISSION OF SIMPSON DOOR COMPANY.

Revisions

Rev. #	Description	Date	by Whom

TITLE 48 2/2 x 6/8
Customer Layout

DRAWING NO. D-48-202-608-0200

LAYOUT	SCALE	PATTERN #
00	NTS	406

DRAWN BY:	DATE
G. Vanairsdale	02/08/05

Simpson®