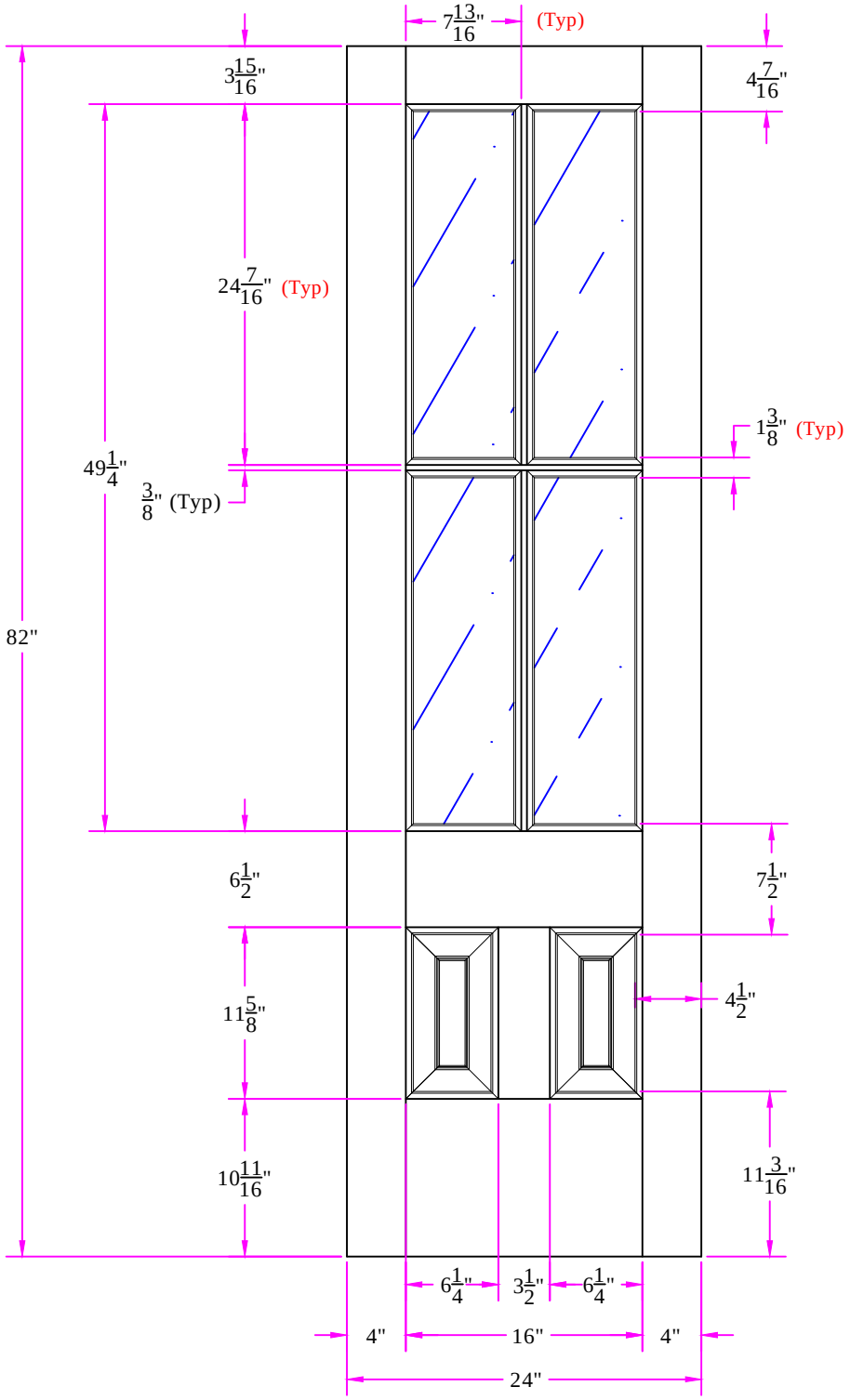

THIS DRAWING AND THE INFORMATION CONTAINED HEREIN IS THE PROPRIETARY TO SIMPSON DOOR COMPANY AND SHALL NOT BE REPRODUCED, COPIED OR DISCLOSED IN WHOLE OR PART, OR USED FOR MANUFACTURE OR FOR ANY OTHER PURPOSE WITHOUT THE WRITTEN PERMISSION OF SIMPSON DOOR COMPANY.

Revisions

Rev. #	Description	Date	by Whom

TITLE	7524 2/0 x 6/10 Customer Layout		
DRAWING NO.	D-7524-200-610-0700		
LAYOUT 00	SCALE NTS	BORE PATTERN # 7006	
DRAWN BY: Z. Saiz	DATE 04/30/2013		

Simpson®